Through-Beam Light Barrier
LXAD 600.3 (Transmitter)

- Range 400 m adjustable
- For separate optical cable and optics
- Optical fiber cable and optic up to 290 °C ambient temperature
- Test function for simulation of object detection
- Parameterization with RS 485 + Software
- Modbus RTU
- Terminal chamber

Product Characteristics

Type	**LXAD 600.3**
Connection	**Art.-No.**
Terminal chamber	5065A
Suitable receivers	LXSA 600, LXSB 600, LXSD 600
Application	Material detection of cold and hot objects

Technical Data

Function	Transmitter
Range adjustable	400 m with LXSA/LXSB 600, 250 m with LXSD 600
Operation range adjustable	320 m with LXSA/LXSB 600, 200 m with LXSD 600
Light type	invisible infrared light
Adjustable	yes (with RS 485 + Software)
Supply voltage	12 - 55 V DC
Ripple	max. 15 %
Test function	yes
Current consumption	max. 40 mA
Digital communication	RS-485 MODBUS RTU
Ambient temperature	-25 ... +70 °C
Protection class	IP 67
Housing material	aluminium / stainless steel
Functional display	LED

Connection

Terminal chamber

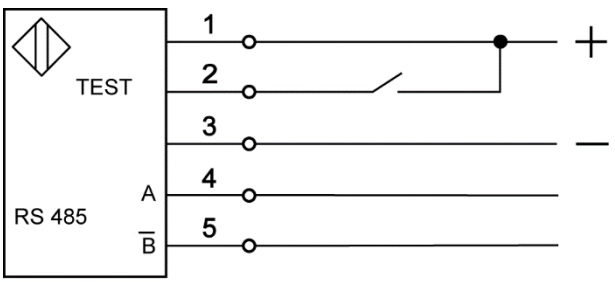

Plug S6 only for Parameterization

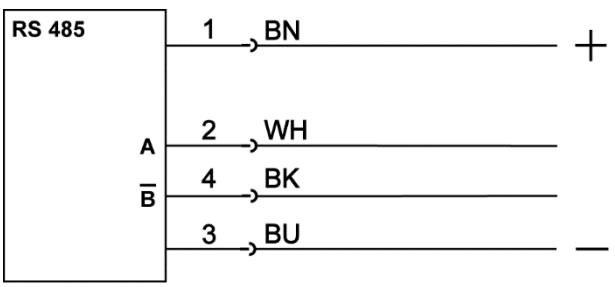

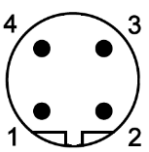

Dimension (mm)

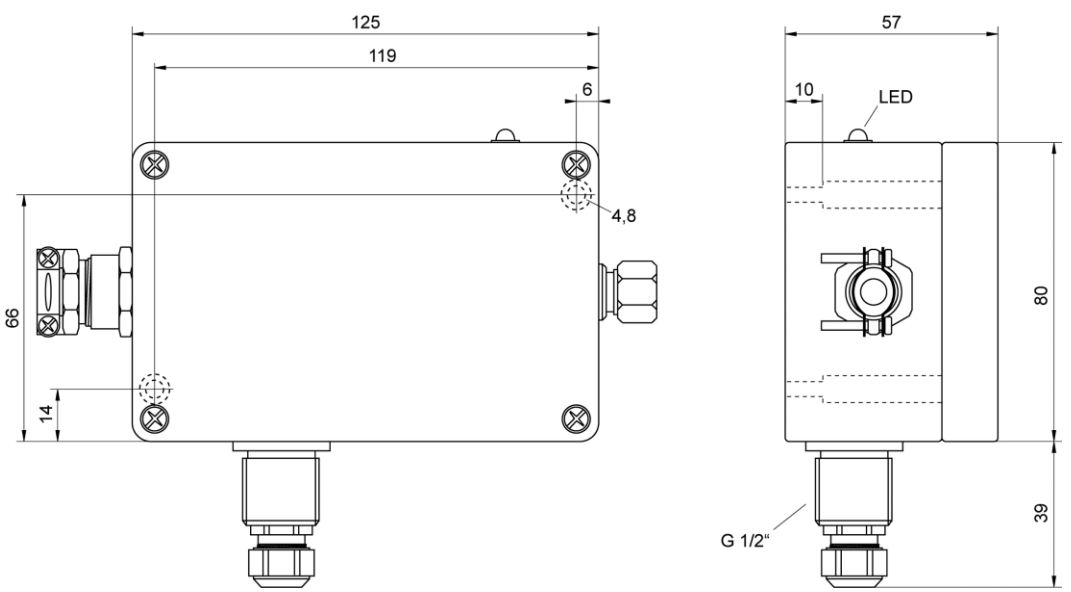

Optical Fiber Cable (not in scope of supply)

	Type	Art.-No.
1 m optical fiber cable up to 290°C ambient temperature	LLK 1	6436C
2 m optical fiber cable up to 290°C ambient temperature	LLK 2	6436F
4 m optical fiber cable up to 290°C ambient temperature	LLK 4	6436I
5 m optical fiber cable up to 290°C ambient temperature	LLK 5	6436J
6 m optical fiber cable up to 290°C ambient temperature	LLK 6	6436M
8 m optical fiber cable up to 290°C ambient temperature	LLK 8	6436K
10 m optical fiber cable up to 290°C ambient temperature	LLK 10	6436L
12 m optical fiber cable up to 290°C ambient temperature	LLK 12	6436N
15 m optical fiber cable up to 290°C ambient temperature	LLK 15	6436Q
20 m optical fiber cable up to 290°C ambient temperature	LLK 20	6436P

Dimension Optical Fiber Cable (mm)

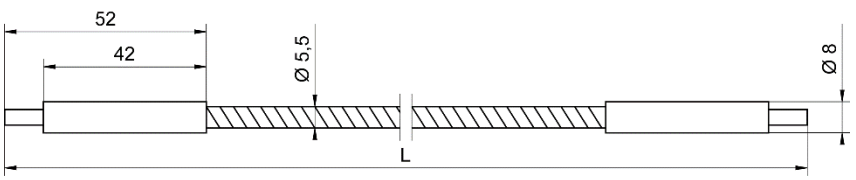

Optic (not in scope of supply)

	Type	Art.-No.
Optic big 1,5° viewing angle, up to 150°C ambient temperature	OAA 154	6049B
Optic big 1,5° viewing angle, up to 290°C ambient temperature	OAA 154H	6049A
Optic small 1,5° viewing angle, up to 290°C ambient temperature	OACF 154	6036O
Optic small 1,5° viewing angle, optical side up to 600°C ambient temperature	OACF 154H	6036R

Dimension Optic (mm)

OAA 154

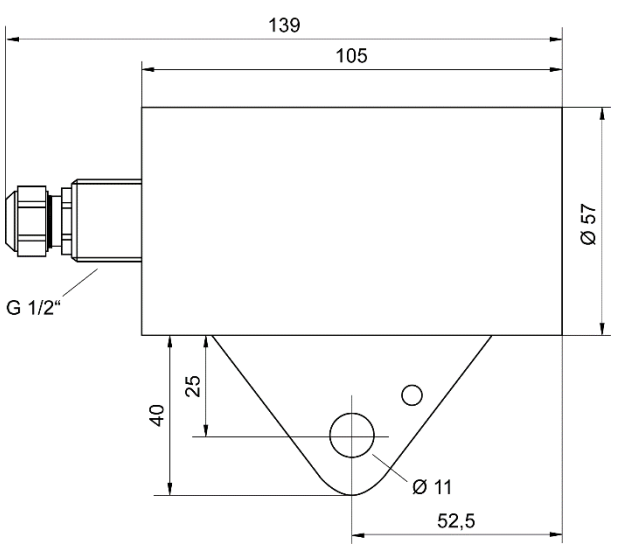

OACF 154

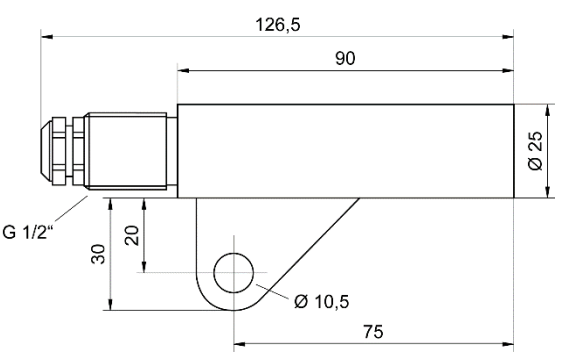

Accessories (in scope of supply)

	Type	Art.-No.
-	-	-

Accessories (**not** in scope of supply)

	Type	Art.-No.
Swivel stand for optic OAA	HM 2	9816B
Swivel stand for optic OACF	HM 4	9816D
Pilot light attachment for adjustment	DAK 308	6913G
Adapter for Pilot light attachment for optic OAA	OL 26	9828H
Adapter for Pilot light attachment for optic OACF	OL 28	9828K
Tubus for optic OAA	OL 19	9828A
Air purge attachment for optic OAA	OL 34	9828Q
Tube for air purge attachment OL 34	OL 36	9828S
Air purge attachment for optic OACF	OL 44	9829B
Adapter G1/2" to M20 internal thread (protective tube mounting of fiber optic cable)	HG 6	9855F
Appropriate protective tube sets for light guides available		
Interface converter for parameterization		
Interface converter RS485, female plug S4 (M12 x 1 A) 5-wire to USB (Internal 24 V power supply for sensor)	SIC 485U	9861B
Adapter cable S6 (M12 x 1 A) female plug 4-pole to S4 (M12 x 1 A) plug 5-pole, 2 m cable (suitable for SIC 485U)	ST S6/4 S4/5-2	9851D
Power supply 90-260 V AC, 24 V DC / 1 A (for SIC 485U)	PPS 2	9853B
Interface converter RS485, plug Sub D 9-pole to USB (External power supply necessary)	SIC 485UD	9861E

Further information

	Document
Protection hoses	P46E
Manual	BDA_LX600_Einweg_D_E